Poles	DIM.A	DIM.B	DIM.C
2A	2.0	4.7	8.0
3A	4.0	6.7	10.0
4A	6.0	8.7	12.0
5A	8.0	10.7	14.0
6A	10.0	12.7	16.0
7A	12.0	14.7	18.0
8A	14.0	16.7	20.0
9A	16.0	18.7	22.0
10A	18.0	20.7	24.0
11A	20.0	22.7	26.0
12A	22.0	24.7	28.0
13A	24.0	26.7	30.0
14A	26.0	28.7	32.0
15A	28.0	30.7	34.0
16A	30.0	32.7	36.0

RoHS Compliant

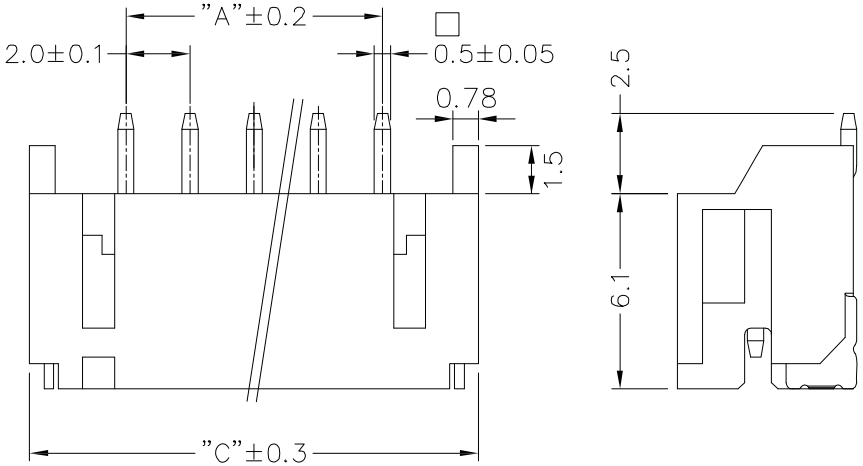

SPECIFICATIONS:
- Applicable Wire:AWG#24~#30
- Voltage Rating:100V AC/DC(rms)
- Current Ration:2.0A AC/DC(AWG#28)
- Withstand voltage:800V AC/Min(rms)
- Operating Temperature:-25℃~+85℃
- Insulation Resistance:1000MΩ min.
- Contact Resistance:30mΩ max.

MATERIAL:
- Terminal:Brass
- Housing:PA9T,UL94V-0,Natural
- Fitting Nail:Phosphor Bronze,Tin Plated

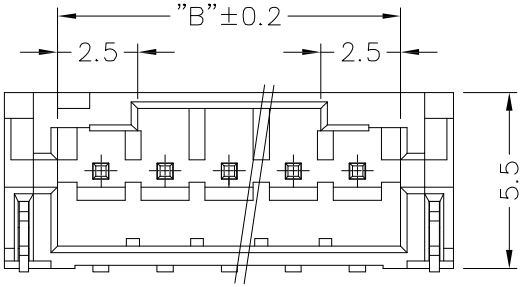

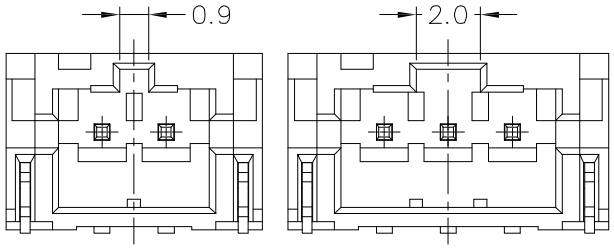

2A 3A

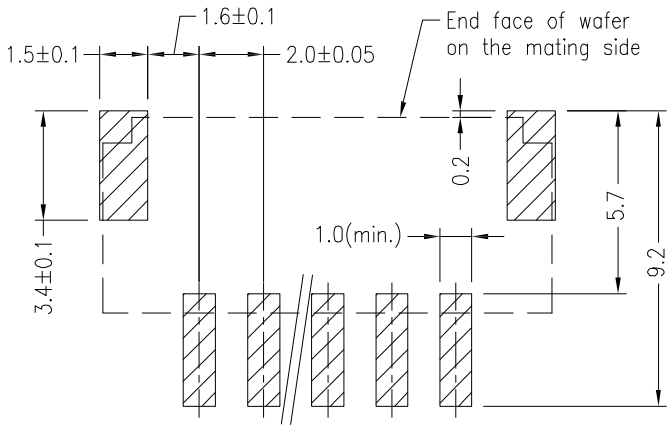

RECOMMENDED PCB LAYOUT

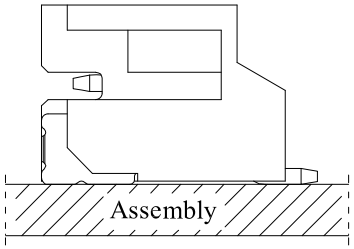

Ordering Information

WG - 3 - XX - PT -20PH-2-44

- WG: 2.0Ph Wafer
- 3: Solder/PCB 3:SMT RA
- XX: Total PIN
- PT: Contact Plated PT: Tin
- 2: Packaging 2: Reel

REV.	REVISION RECORD	DATE
A	Original	12/14/18"
B	Revised	12/26/19"

General Tolerance: LINEAR 0.0 ±0.25, 0.00 ±0.20; ANGLE ±3°

UNIT:mm

A4	NAME
APPROVED	KENNY
DESIGNER	BRUCE
DRAWN	JINDAR

ARIBA TECHNOLOGY CO., LTD.

TITLE: 2.0Ph Wafer SMT Right Angle 5.5H

DWG.NO: WG3XXPT20PH2-44 REV. B

SCALE 1 : 1 SHEET 1 OF 1